NAME:

Westminster School Challenge 2007

Mathematics II

1½ hours

You are expected to use a calculator in this paper.

All working should be clearly shown.

You should attempt all the questions, in any order you like.

1 James has a record breaking sausage which is 45 feet 2 inches long.
He cuts off pieces which are 2 feet $3\frac{1}{2}$ inches long, so they just fit on his barbecue.

a How many pieces can he cut?

b What length of sausage is left over?

2 Ben sets out on a journey by catching a bus to the station. The bus ride takes 8 minutes. Then Ben has to wait for a train. The train travels at an average speed of 84 kilometres per hour and Ben travels 49 kilometres by train. When Ben gets off the train he is lucky enough to find a taxi immediately. The taxi charges 65p per minute and Ben has to pay £7·80 when he gets out of the taxi at his destination. Ben notices that the whole journey takes him exactly one hour.

a How long did Ben wait at the station?

b Ben travelled a total distance of 60 kilometres. If the average speed of the taxi was 45 kilometres per hour, what was the average speed of the bus?

3 a Simplify $x(x-1)+x(x+1)$.

b What is the result of dividing $\frac{x}{2}$ by x?

c Solve the equation $\frac{1}{x-1}=2$.

d Solve the simultaneous equations

$y = x + 4$

$3y + x = 2$

4 The diagram shows rectangle ABCD and triangle AXY.
AX = 29 cm, DX = 20 cm, CY = 10 cm and AB = 37 cm.
Find the area of

a the rectangle ABCD;

b the triangle AXY.

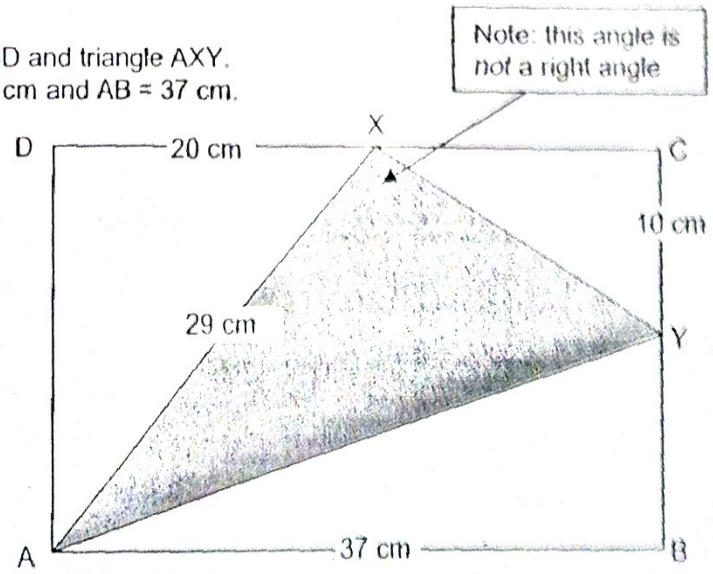

5 a In a shop, a computer costs £768 before tax is added, at a rate of 19 per cent. What does the computer cost after tax is added?

b Rupert buys the computer on the internet at £768, including tax. What percentage discount is Rupert getting by buying online?

c Simon buys a more expensive computer in the shop. This computer cost Simon £1404·20, including tax. How much tax did he pay?

6 Two cylinders have the same volume. The height of the first cylinder is 15·2 cm, and its radius is 3·7 cm. The height of the second cylinder is 9·4 cm. Find the radius of the second cylinder.

7 High tides occur every 12 hours and 25 minutes.
At Lowestoft, on 1st May, there was a high tide at 7:00 a.m.

a At what times were the two high tides at Lowestoft on 4th May?

b Which was the first day in May when there was only one high tide?

c Which was the first day in May when the first high tide was at 03:45?

8 Two numbers A and B have $A - B = 5$ and $A \times B = 30003000$.

a Explain why both A and B must be multiples of 5.

b Use your calculator to find A and B.

9 There are N people on a bus when it leaves the bus station.
At the first stop, half the people on the bus get off, but another 11 get on.
At the second stop, a third of the people on the bus get off, but another 8 get on.

a Write an expression in N for the number of passengers now on the bus.

In fact, the number of passengers now on the bus is the same as it was when it left the bus station.

b Find N

10 The diagram shows a wire frame cube.

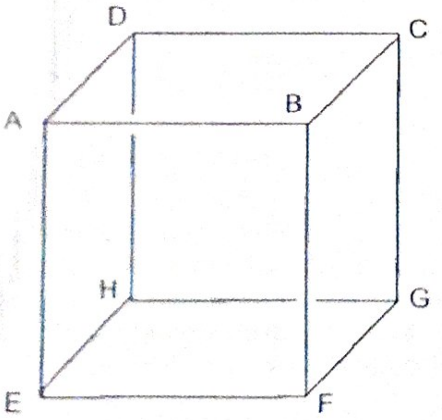

An ant has to get from point A to point G by crawling along the edges of the cube.

Write down all the ways the ant could do this, without visiting any vertex twice.

For instance, ABCDHG is one possible route.

11 The diagrams below show rectangles with their vertices on the circumference of a circle.
The two circles have the same radius.

a Find the height h of the first rectangle.

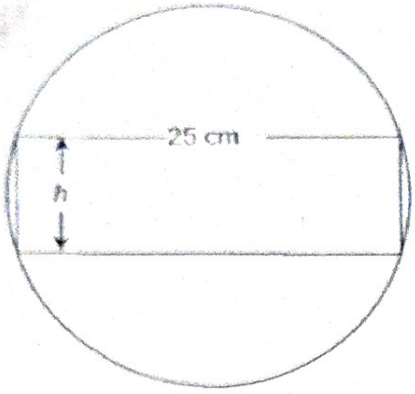

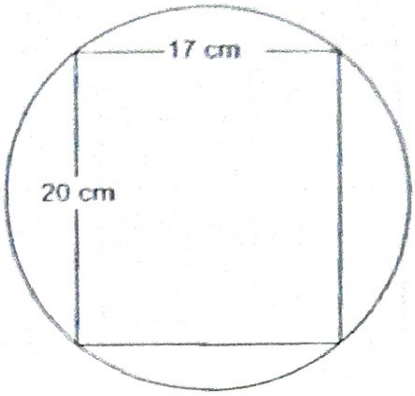

The diagram below shows the *same* two rectangles with their vertices on the same circle.

b What is the shaded area?

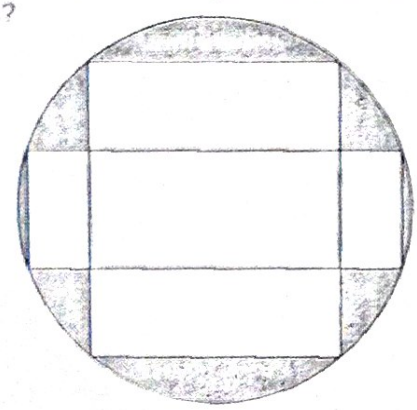

Question 12 is on a separate sheet.

Name:

WORK ON THIS PAGE. HAND IT IN WITH YOUR OTHER ANSWERS.

12 In the diagram below, the heavy lines show how the two points labelled A have been connected together, the two points labelled B have been connected together and the two points labelled C have been connected together.

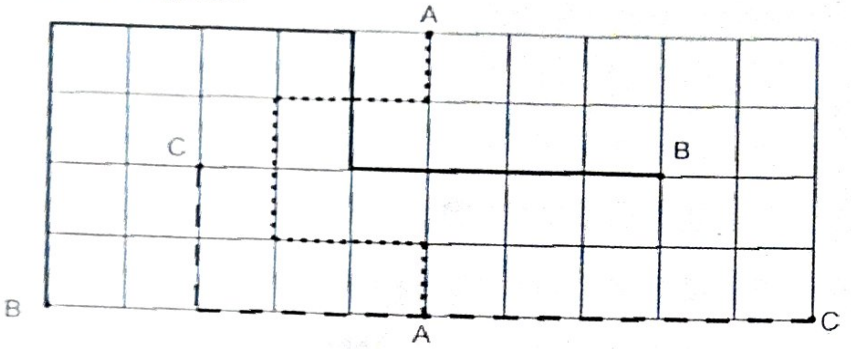

Unfortunately, this is not acceptable: the line joining the two points labelled B crosses the line joining the points labelled A; also, the line joining the two points labelled C touches the line joining the points labelled A.

On the grid below, show how to connect together the two points labelled A, the two points labelled B, and the two points labelled C, so that the three lines neither cross nor touch each other.
You may only draw lines on top of the grid lines.
Do not draw outside the grid, or across the small squares.

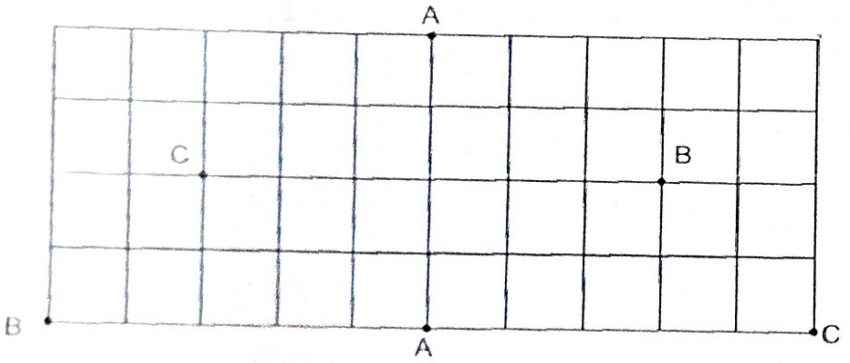

Here are two spare grids, in case you make a mistake. You only need one answer.